DETAIL NAME:					
WALL BEARING ON CIP FOOTING/FOUNDATION					
DRAWN BY: STAFF	CHECKED BY: STAFF	DATE: 03/29/2023			STANDARD DETAIL NUMBER: 5.3.1.1.41.01

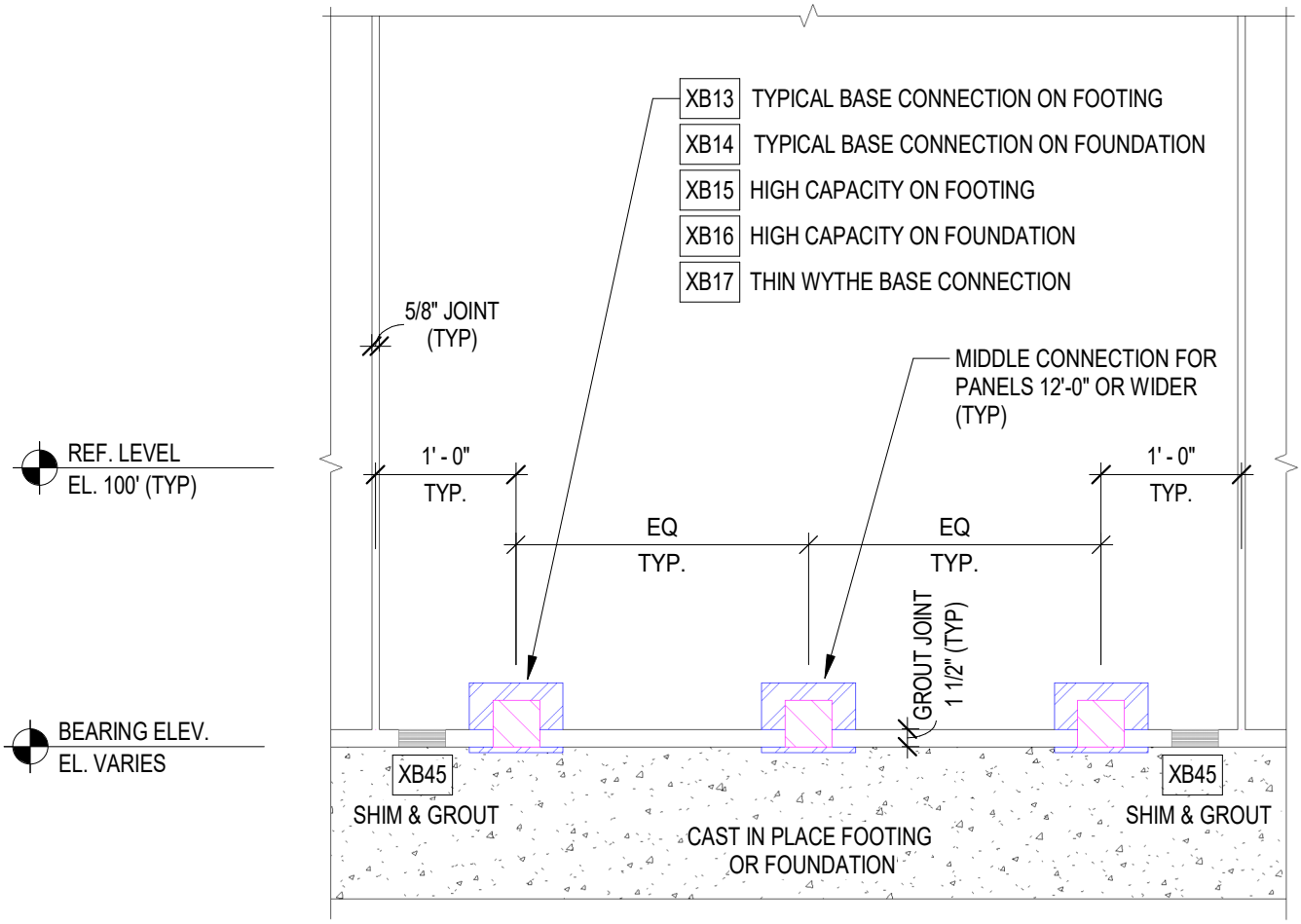

DETAIL NAME:					
INSULATED WALL BEARING ON FOOTING MOMENT RESISTANT CONNECTION					
DRAWN BY: STAFF	CHECKED BY: STAFF	DATE:			STANDARD DETAIL NUMBER: 5.3.1.1.41.04

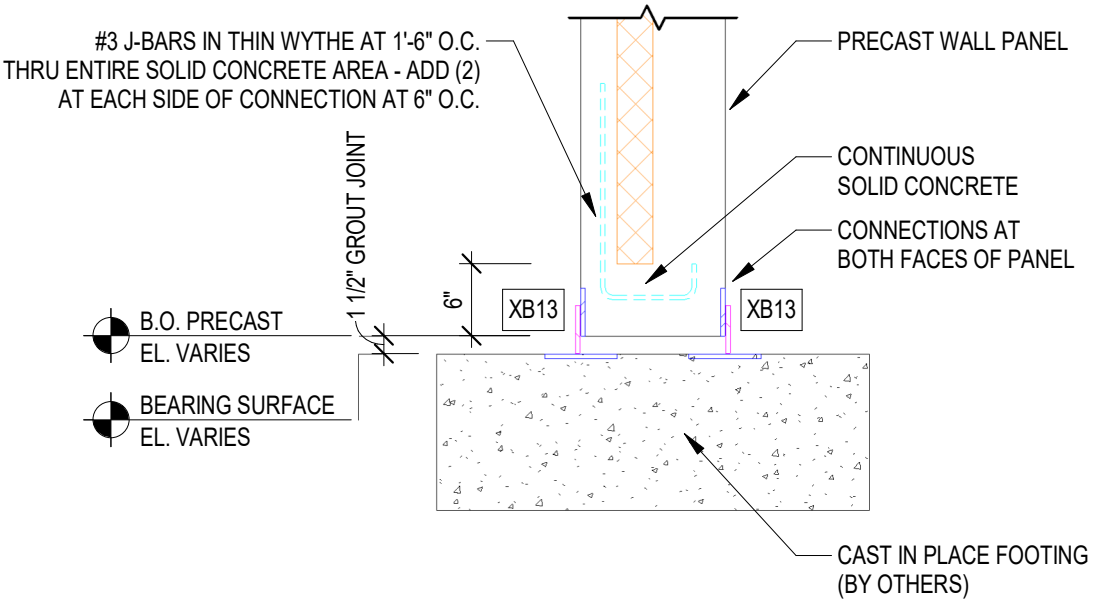

DETAIL NAME:					
SOLID WALL BEARING ON FOOTING MOMENT RESISTANT CONNECTION					
DRAWN BY: STAFF	CHECKED BY: STAFF	DATE:			STANDARD DETAIL NUMBER: 5.3.1.1.41.05

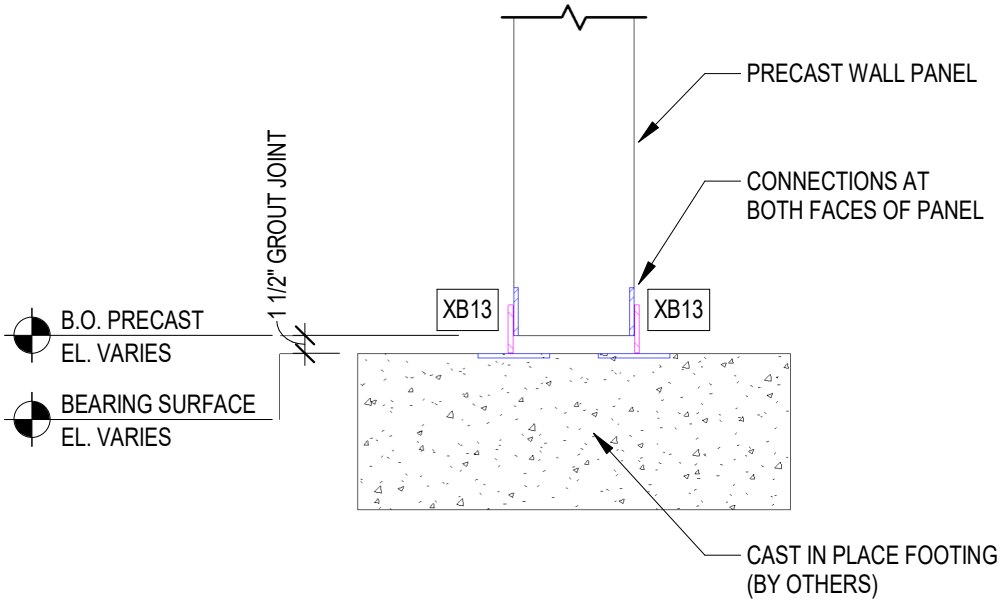

DETAIL NAME:					
INSULATED WALL PANEL BEARING ON FOOTING					
DRAWN BY: STAFF	CHECKED BY: STAFF	DATE:			STANDARD DETAIL NUMBER: 5.3.1.1.41.06

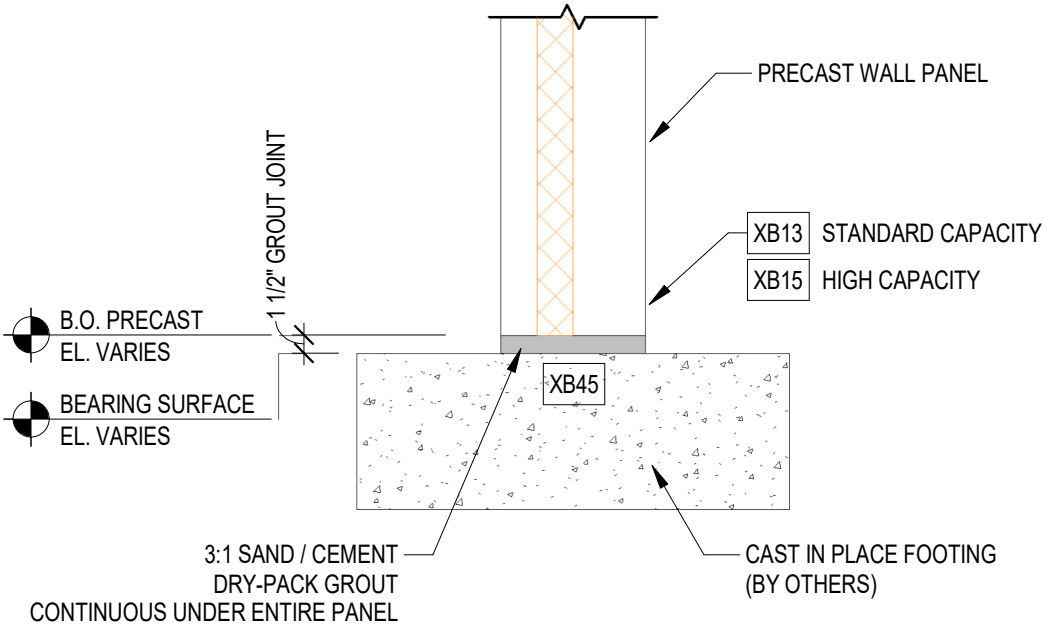

DETAIL NAME:					
INSULATED WALL PANEL BEARING ON FOUNDATION WALL					
DRAWN BY: STAFF	CHECKED BY: STAFF	DATE:			STANDARD DETAIL NUMBER: 5.3.1.1.41.07

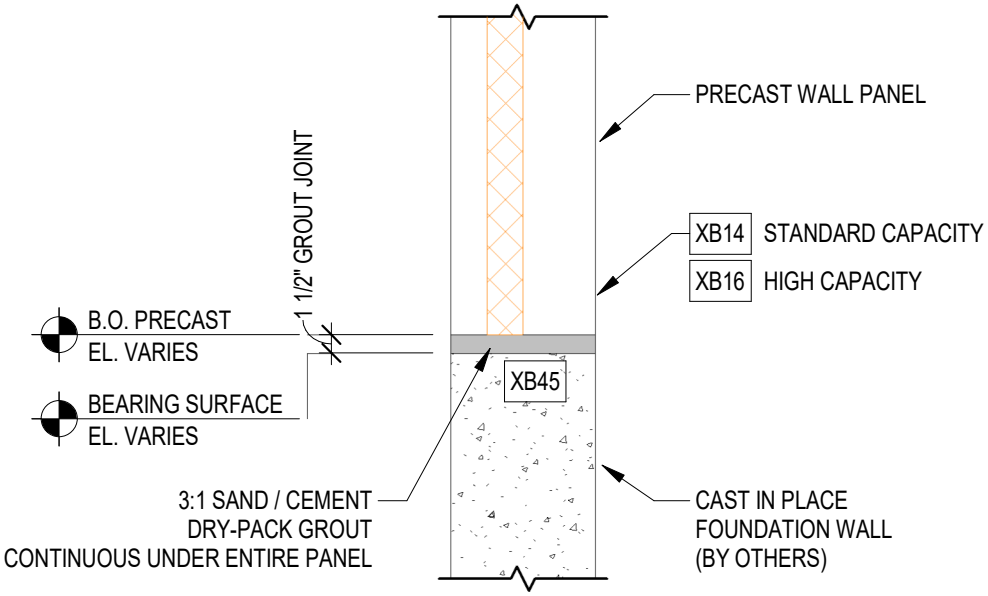

DETAIL NAME:					
SOLID WALL PANEL BEARING ON FOOTING					
DRAWN BY: STAFF	CHECKED BY: STAFF	DATE:			STANDARD DETAIL NUMBER: 5.3.1.1.41.08

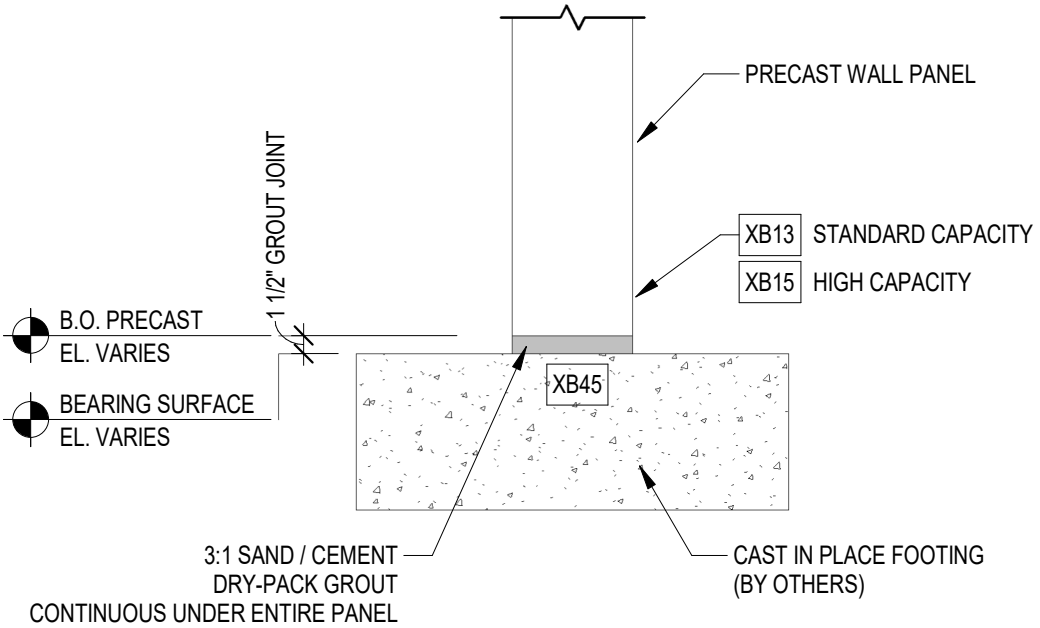
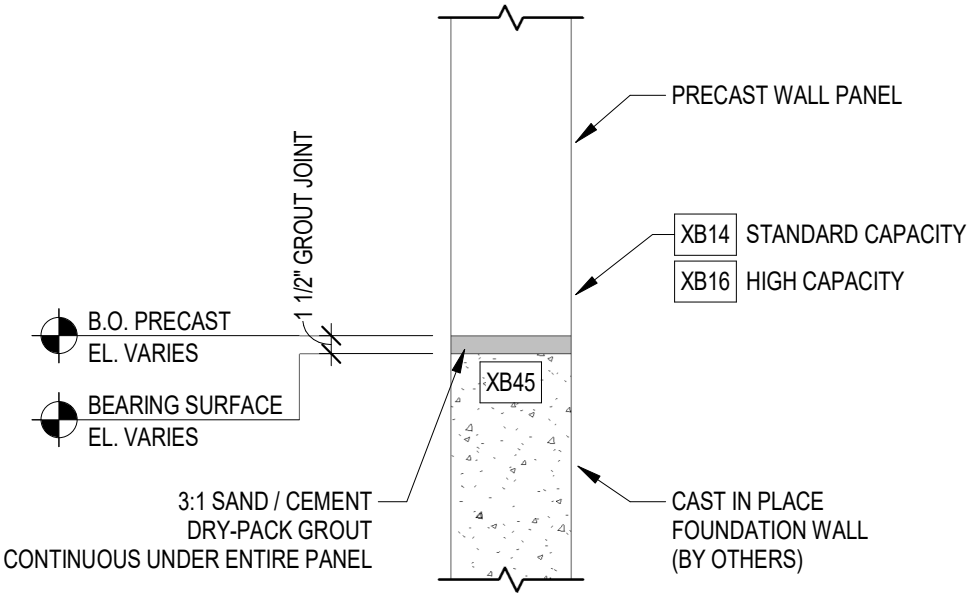
DETAIL NAME:					
SOLID WALL PANEL BEARING ON FOUNDATION WALL					
DRAWN BY: STAFF	CHECKED BY: STAFF	DATE:			STANDARD DETAIL NUMBER: 5.3.1.1.41.09